planet

Verifone UX410 Setup and User Guide

2024

Table of contents

1. UX410 box contents 2
2. Ports of the Controller Unit 4
3. Mounting of the Antenna 6
4. Service Menu 7
5. Configuring Network Parameters 8
6. Firmware Download 16
7. Configuration Download 32
8. Spare Order List: 39
9. Contact Us: 41

1. UX410 box contents

- The UX 410 Controller Unit.
- The UX 410 Antenna Unit.
- One SMA (RF) coaxial cable.
- One RJ45 communication cable to connect the Antenna Unit to the
- Controller Unit.
- Clamping Plate for Antenna Unit (Applicable for certain M Level P/N).

Front of the UX 410 Antenna Unit

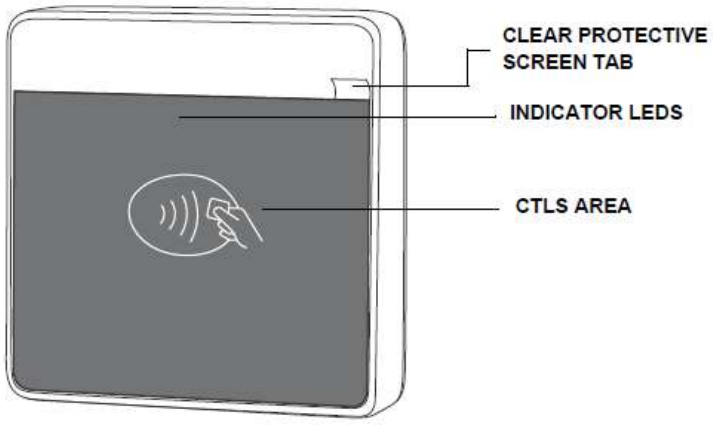

The front of the UX 410 Antenna Unit shows the following:

Customer-view **indicator LEDs** that denote successful or erroneous. transactions through the LED color lighting and combination.

When the unit is ready to accept a transaction, the CTLS logo and first LED from the left will light up. When you tap your card, all the LEDs will light up and the buzzer will sound for about 2 seconds, prompting you to remove your card.

The **CTLS logo** showing the general area where users can tap their cards to perform payment transactions.

The **Clear Protective screen**, which keeps the CTLS area safe from scratches during the installation procedure. Make sure you remove this (using the tab) after successfully mounting the UX 410 Antenna Unit.

All UX 410 Antenna Units with article number M159-410-1xx have to be mounted on a metallic enclosure.

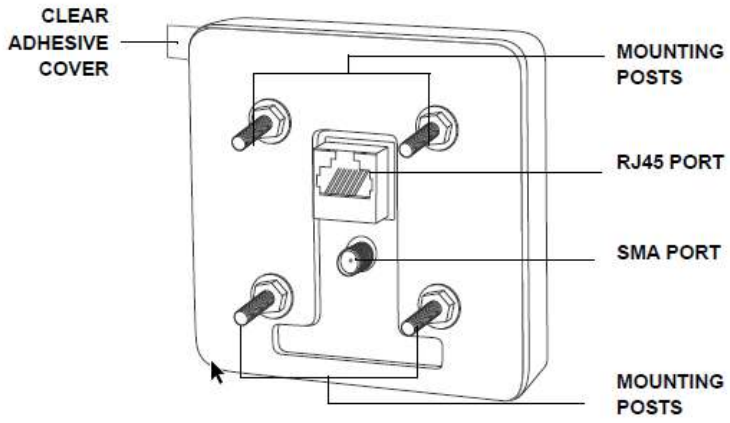

The reverse side of the UX 410 Antenna Unit shows the following:

RJ45 host communication connector.

SMA (RF) antenna connector.

Four **mounting posts**.

Clear adhesive cover. Remove this cover prior to mounting the UX 410 Antenna Unit to aid in adhesion to the installation panel.

2. Ports of the Controller Unit

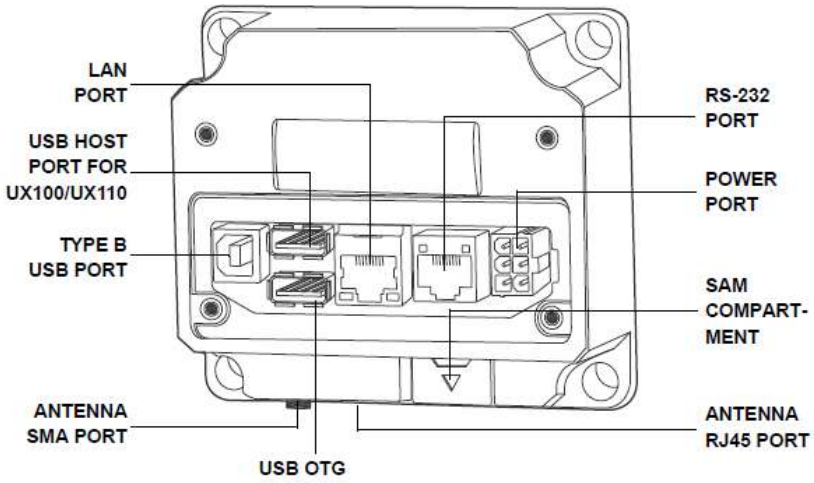

- USB Device (Type B) [client]
- 2x Powered USB (Type A) Ports
  - 1x Full Speed, High Powered USB (Type A), Port 1 [Host]
  - 1x Powered USB (Type A), Port 2 [OTG]
- Power port 12V DC to 24V DC
- LAN with 2 LEDs
- COM1 (RS-232)
- SMA/Antenna (RJ45)
- SAM Card compartment

There are three switches on the UX 410: two Anti-Removal Switches (ARS) on the installation panel side and one Service Switch on the underside of the Controller unit

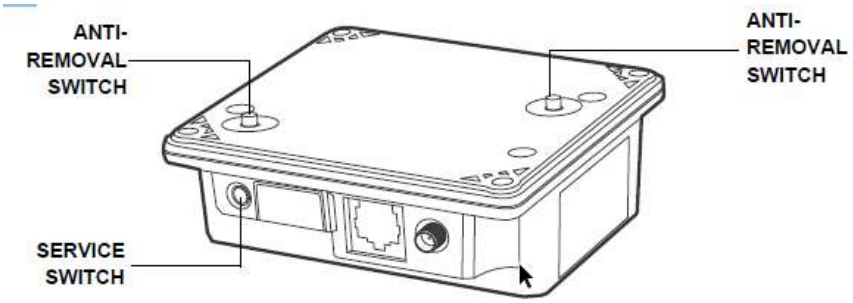

The ARS detect any removal attempt and disables any PIN-related transaction.

The ARS switches are not used if the ux410 is operated in no CVM fashion.

3. Mounting of the Antenna

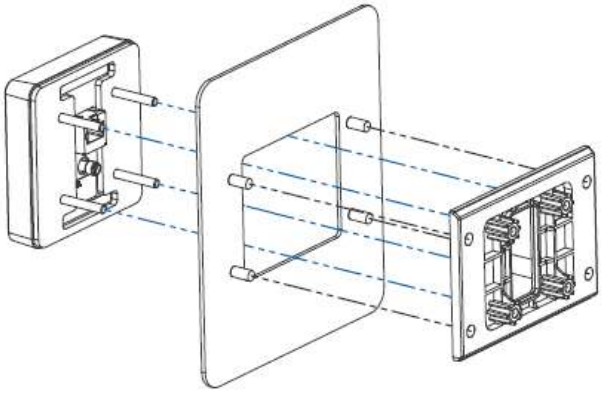

4. Service Menu

For a VeriFone UX410 terminal it is only possible to access the Service menu after connecting a Verifone UX100 Pin pad.
Access to the service menu will be granted by pushing the Yellow Clear button of the UX100 pin pad.

By default, the menu will only be available for 90 seconds after a power cycle.
If the payment app has been restarted after the reset of the config, then menu will not be accessible until the next power cycle.

5. Configuring Network Parameters

Step 1:
Press the **"clear"** button on the UX100 pin pad and enter the menu password.

For the password of **UAT** devices, please liaise with the solution engineer that has been assigned to support you during the integration phase.

For **production** devices contact Customer Service.

Step 2:
Select **“Config”** (option 2).

Step 3:
Select **“Network”** (option 2)

Step 4:
Select **“LAN”** (option 1)

Step 5:
Select **“Config”** (option 2)

Step 6:
Select Static or DHCP depending on your network requirements.

Step 7: Select Static IP

- Enter Static IP address > Select Enter (green button)
- Enter Subnetmask > Select Enter (green button)
- Enter Default gateway > Select Enter (green button)
- Enter DNS 1 server IP address > Select Enter (green button)
- Terminal will return to the Network menu screen

Commented [RS1]: @Pascal Homann to input terminal screen.

Commented [PH2R1]: screen added

Step 8: Select DHCP

Commented [RS3]: @Pascal Homann to input screens.

Commented [PH4R3]: screens added

6. Firmware Download

To download the last available, Integra TE Firmware package, the user must access the Service Menu of the terminal and trigger a firmware download. For a VeriFone UX410 terminal it is only possible to access the Service menu after connecting a Verifone UX100 Pin pad.

Access to the service menu will be granted by pushing the Yellow Clear button of the UX100 pin pad.
See the below steps.

Step 1:
Press the **"clear"** button on the UX100 pin pad

Step 2:
Enter the menu password.

UAT: Contact Solution Engineering to get your Menu password.

- Provide Terminal Identification Number (TID)

PROD: Contact Customer support to get your Menu password.

- Provide Terminal Identification Number (TID)

Step 3:
Select **“Config”** (option 2)

Step 4:
Select **"Update"** (option 3)

Step 5:
Select **“Firmware”** (option 1)

Step 6:
The TMS IP/DNS should already be populated.
Press **“Enter”**

Step 7:

The TMS port is populated. Do not change it.

Step 8:
Note:
UAT Terminals: The TMS Terminal Identification Number (TID) is pre-configured/populated.

PROD: The TMS Terminal Identification Number (TID) is not pre-configured/populated. Merchants will need to contact Onboarding to get the TMS TID number.

Press **"Enter"**

Step 8:

Note:
UAT Terminals: The Intance Terminal Identication Number (TID) is pre-configured/populated.

PROD: The Instance Terminal Identification Number (TID) is not pre-configured/populated. Merchants will need to contact Onboarding to get the TMS TID number. The Instance TID is normaly the same as the TMS TID.

Press **"Enter"**

The terminal is now trying to contact our TMS (Terminal Management System)

The terminal will reboot after having finished the installation of the new firmware and go back to the below idle screen.

Step 9:

Check that the new Firmware has been installed.

Press the **“clear”** button on the UX100 pin pad and enter the menu password.

For the password of **UAT** devices, please liaise with the solution engineer that has been assigned to support you during the integration phase.

For **production** devices contact Customer Service.

Step 10:

Select **“Config”** (option 2)

Step 11:

Select “Info” (option 1)

Pressing the arrow down key will show you the bottom part of the screen

7. Configuration Download

To download the latest available configuration for your terminal by following the below steps. For a VeriFone UX410 terminal it is only possible to access the Service menu after connecting a Verifone UX100 Pin pad.

Access to the service menu will be granted by pushing the Yellow **"Clear"** button of the UX100 pin pad.
See the below steps.

Step 1:
Press the **"clear"** button on the UX100 pin pad.

Step 2:
Enter the menu password.

Step 3:
Select **“Config”** (option 2)

Step 4:
Select **"Update”** (option 3)

Verifone
14:40
1-Info
2-Network
3-Update
4-System
1
2
3
CANCEL
4
5
6
CLEAR
7
8
9
HELP
0
ENTER

Step 5:
Select **"Config"** (option 2)

Step 6:
Note:
UAT Terminals: The TMS Terminal Identification Number (TID) is pre-configured/populated.

PROD: The TMS Terminal Identification Number (TID) is not pre-configured/populated. Merchants will need to contact Onboarding to get the TMS TID number.

Press **"Enter"**

Verifone
Please wait
CANCEL
CLEAR
HELP
ENTER

Verifone
APP will
CANCEL
CLEAR
HELP
ENTER

Verifone
Verifone
Stopping
applications.
CANCEL
CLEAR
HELP
ENTER

Verifone
Verifone
Starting
CANCEL
CLEAR
HELP
ENTER

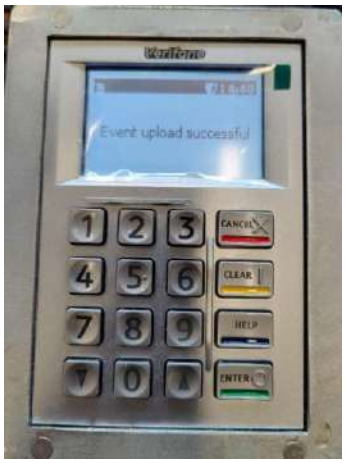

8. Spare Order List:

Commented [RS5]: Not sure if this is required

EU Version

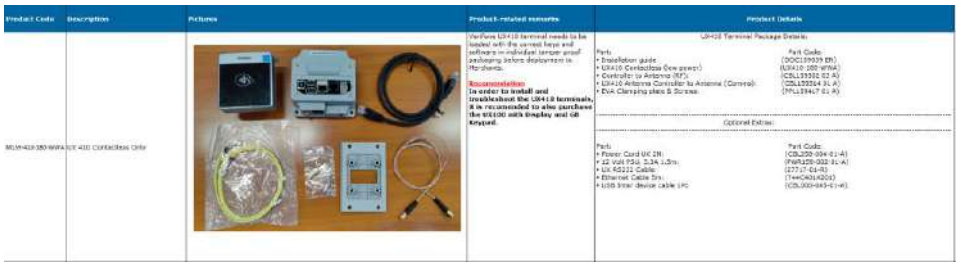

US Version

UK Version

Product Code	Description	Pictures	Product-related remarks	Product Details
M159 410 100 RWA	UX 410 Contactless Only		Verifone UX410 terminal needs to be loaded with the correct keys and software in individual tamper proof packaging before deployment to Merchants. **Recommendation** **In order to install and troubleshoot the UX410 terminals, it is recommended to also purchase the UX100 with Display and GB Keypad.**	UX410 Terminal Package Details: Part: / Part Code: • Installation guide / (DOC158609 EN) • UX410 Contactless (low power) / (UX410 100 RWA) • Controller to Antenna (RF) / (CBL159302 03 A) • UX410 Antenna Controller to Antenna (Comms) / (CBL159314 01 A) • EMA Clamping plate & Screws / (PPL159417 31 A) Optional Extras: Part: / Part Code: • Power Cord UK 2M / (CBL358 004 01 A) • 12 Volt PSU, 2.3A 1.5m / (PWR 159 002 01 A) • UX RS232 Cable / (27717 01 R) • Ethernet Cable 5m / (744C40 11231) • USB Inter device cable 1M / (CBL000 045 01 A)

9. Contact Us:

Need help?

If you have a technical issue or need support troubleshooting, please check the relevant portal for assistance.

Our Global Support Team will be glad to help.

Visit **www.weareplanet.com/support**

Disclaimer:

The procedures included in the document are only valid for brand new terminals. Terminals used beforehand may behave differently.